MIG/MAG WELDING MACHINES

ALF 251 aXe
ALF 261 aXe
ALF 280 aXe
ALF 320 aXe
ALF 400 aXe

MINOR2 - MAJOR – SYNERGY
BASIC

INSTRUCTION MANUAL

CONTENT:

1. INTRODUCTION 3
2. SAFETY INSTRUCTIONS AND WARNINGS 4
3. CONDITIONS OF USE 7
4. TECHNICAL DATA 8
5. ACCESSORIES 10
6. DESCRIPTION OF THE APPLIANCE 11
7. GETTING STARTED 18
8. WELDING 23
9. ROUTINE MAINTENANCE & INSPECTION 27
10. STATEMENT OF WARRANTY 28
11. DISPOSAL 29
12. WARRANTY LIST 29

1. INTRODUCTION

Congratulations on your new ALFA IN product. We are proud to have you as our customer and will strive to provide you with the best service and reliability in the industry.

This Operating Manual has been designed to instruct you on the correct use and operation of your ALFA IN product. Your satisfaction with this product and its safe operation is our ultimate concern. Therefore please take the time to read the entire manual, especially the Safety Precautions. They will help you to avoid potential hazards that may exist when working with this product.

Read and understand this entire Manual and your employer's safety practices before installing, operating, or servicing the equipment. While the information contained in this Manual represents the Manufacturer's best judgement, the Manufacturer assumes no liability for its use.

Machines ALF with KTC version aXe differ from the original version of the machine by another kind of BASIC electronics - description of changes can be found below the table of the technical data.

ALF 251/261/280/320/400 aXe are three phase sturdy welding machines for MIG/MAG welding.

The machines are designed to produce maximum power output combined with high reliability and efficiency.

The users interface is as simple as possible; however, there are secondary parameters that can be set from the main front panel if suitable. All of them are available in compact models, ALF 280, 320 and 400 can be ordered also as sets consisting of the generator, interconnection cable bundle and separate wire feeding unit. We will refer to the MINOR2-MAJOR and SYNERGY controls as DIGITAL.

CONTROL MODEL	BASIC	MINOR2	MAJOR	SYNERGY
A + V meter	optional	NO	YES	YES
Wire initial speed (Soft Start)	NO	NO	YES	YES
Advice of the parameter settings	NO	NO	NO	YES
Electronic feedback of the wire speed	NO	YES	YES	YES
2 stoke / 4 stroke	YES	YES	YES	YES
Adjustable Post and Pre Gas time	NO	YES	YES	YES
Spot and Interval welding	YES	YES	YES	YES
Adjustable Burn Back Time	NO	YES	YES	YES

We reserve the law of adjustments and changes in case of printing errors, change of technical paramaters, accessories etc. without previous notice. These changes may not be reflected in the manuals for use in paper or electronic form.

2. SAFETY INSTRUCTIONS AND WARNINGS

1. OPERATION AND MAINTENANCE OF WELDING EQUIPMENT CAN BE DANGEROUS AND HAZARDOUS TO YOURHEALTH.
2. Arc welding produces intense electric and magnetic emissions that may interfere with the proper function of cardiac pacemakers, hearing aids, or other electronic health equipment. Persons who work near arc welding applications should consult their medical health professional and the manufacturer of the health equipment to determine whether a hazard exists.
3. Once the packing has been opened, make sure that the machine is not damaged. If in any doubt, call the service centre.
4. This equipment must only be used by qualified personnel.
5. During installation, any electric work must only be carried out by trained personnel.
6. The machine must be used in a dry place with good ventilation.
7. Make sure that no metal dust can be drawn in by the fan inside the machine, as this could cause damage to the electronic circuits.
8. It is prohibited to connect more than one generator in series or in parallel.
9. When installing the machine, follow the local regulations on safety.
10. The position of the machine must allow easy access by the operator to the controls and connectors.
11. When the welding machine is operating, all its covers and doors must be closed and well fixed.
12. Do not expose the welding machine to direct sunlight or to heavy rain. This equipment conforms to protection rating IP23S.
13. The operator must wear gloves, clothes, shoes, and a helmet or a welder’s helmet, which protect and are fire-resistant in order to protect him against electric shock, flashes and sparks from cutting.
14. The operator must protect his eyes with safety visor or mask designed for welding, fitted with standard safety filters. He should also be aware that during arc welding ULTRAVIOLET RADIATION is emitted. Therefore it is vital that his face is also protected from radiation. Ultraviolet rays produce the same harmful effect as sun burning on unprotected skin.

15. The operator is obliged to warn anyone near the welding area of the risks that welding involves and to arrange to provide adequate protection equipment.
16. Keep all fumes and gases from the breathing area.
17. Keep your head out of the fume plume.
18. Use an air-supplied respirator if ventilation is not adequate to remove all fumes and gases.
19. The kinds of fumes and gases from the plasma arc depend on the kind of metal being used, coatings on the metal, and the different processes. You must be very careful when welding any metals which may contain one or more of the following:

Antimony	Chromium	Mercury
Nickel	Cobalt	Arsenic
Barium	Copper	Selenium
Beryllium	Lead	Silver
Cadmium	Manganese	Vanadium

20. Always read the Material Safety Data Sheets (MSDS) that should be supplied with the material you are using. These MSDSs will give you the information regarding the kind and amount of fumes and gases that may be dangerous to your health.
21. It is very important to arrange for sufficient ventilation, especially when welding in enclosed spaces. We suggest using suitable fume extractors to prevent the risk of intoxication by fumes or gas generated by the welding process.
22. Noise can cause permanent hearing loss. Welding arc processes can cause noise levels to exceed safe limits. You must protect your ears from loud noise to prevent permanent loss of hearing.
23. To protect your hearing from loud noise, wear protective ear plugs and/or ear muffs. Protect others in the workplace.
24. Noise levels should be measured to be sure the decibels (sound) do not exceed safe levels.
25. The operator must ensure all flammable materials are removed from the work area to avoid any risk of fire.
26. The operator must NEVER weld containers that have previously contained petrol, lubricants, gas or similar flammable materials, even if the container has been empty for a considerable time. THERE IS A VERY HIGH RISK OF EXPLOSION.
27. The operator must be aware of all the special regulations which he needs to conform to when cutting in enclosed spaces with a high risk of explosion.
28. To prevent electric shock, we strongly suggest the following rules:
    a) Do not work in a damp or humid environment.
    b) Do not use the machine if its cables are damaged in any way.

c) Make sure that the earthing system of the electric equipment is correctly connected and operational.
d) The operator must be insulated from the metal components connected to the return wire.
e) The earthing of the piece being worked could increase the risk of injury to the operator.

29. EN 60974-1 Standard: Open-circuit voltage. During the operation of the machine, the highest voltage, with which it is possible to come into contact, is the open-circuit voltage between the clamps.

30. The maximum open-circuit voltage of the plasma machines is established by national and international standards (EN 60974-1) depending on the type of current to be used, on its waveform and on the hazards arising from the work place. These values are not applicable to the strike currents and those for stabilisation of the arc that could be above it.

31. The open-circuit voltage, for as many adjustments as possible, must never exceed the values relating to the various cases shown in the following table:

Case	Working conditions	Open-circuit voltage	
1	Places with increased risk of electric shock	DC current: 113V peak value	AC current: 68V peak value and 48V effective
2	Places without increased risk of electric shock	DC current: 113V peak value	AC current: 113V peak value and 80V effective
3	Torches held mechanically with increased protection for the operator	DC current: 141V peak value	AC current: 141V peak value and 100V effective
4	Plasma cutting	DC current: 500V peak value	

32. In case 1, the dc machines with rectifier must be built in such a way that, in case of a fault developing in the rectifier (for example open circuit, short circuit or lack of power), the permitted values cannot be exceeded.

The welding machines of this type can be marked with the symbol: S

33. Before opening the machine switch off the machine and disconnect it from the power socket.

34. Only personnel authorised by this company can carry out maintenance on the machine.

PROTECTIVE UTTILITIES

1. Welding helmet with filter shade at least 10
2. Welding gloves
3. Welding apron and cloth
4. Welding boots

RISK OVERVIEW

1. Risk of electric shock.
2. Ultraviolet light and light radiation
3. Risk of inhaling gas fumes and dust particles
4. Burns
5. Noise

NOTE

1. It is forbidden to operate a machine with damaged insulation of the welding torch or supply cable.
2. Never operate the machine taken down or damaged covers.
3. It is forbidden to operate the machine in wet environments and outdoors in rain or snow.
4. Ensure proper grounding clamping pliers, which also reduces the risk of electric shock.
5. Use prescribed protective utilities, keep them dry.
6. Arc welding produces intense electric and magnetic emissions that may interfere with the proper function of cardiac pacemakers, hearing aids, or other electronic health equipment. Persons who work near plasma arc cutting applications should consult their medical health professional and the manufacturer of the health equipment to determine whether a hazard exists.
7. Never aim the torch against the eyes, body or other person.

3. CONDITIONS OF USE

1. This equipment must only be used by qualified personnel.
2. During installation, any electric work must only be carried out by trained personnel.
3. Device complies with IEC 61000-3-12.
4. Do not expose the plasma machine to direct sunlight or to rain or snow. This equipment conforms to protection rating IP23S.
5. Working ambient temperature between -10 and +40 °C.
6. Relative humidity below 90% at +20 °C.
7. Up to 3000 m altitude.
8. Place the machine the way that the cooling air can enter the vents without restriction to. It is necessary to ensure that no impurities,

especially metal particles, are not drawn into the machine.

9. Welding machine in terms of interference suppression is intended primarily for industrial premises. In the case of use of other areas may be need for special measures (see EN 60974-10).
10. The stability of the machine is guaranteed up to 10° inclination under the following conditions:
    a. The machine must be secured against rolling away
    b. The wire feed unit must not be mounted on the generator
    c. The gas bottle with a maximum height of 0.9 m may be placed and properly anchored on the platform
11. The machine must be protected against
    a. Moisture and rain and snow
    b. Mechanical damage
    c. Draft and any ventilation of neighbouring machine
    d. Excessive overloading - crossing technical parameters
    e. Rough handling

ELECTROMAGNETIC COMPATIBILITY

The welding device is in terms of interference designed primarily for industrial areas. It meets the requirements of EN 60974-10 class A and it isn't designed for using in residential areas, where the electrical energy is supplied by public low-voltage power supply network. It can be here potential problems with ensuring of electromagnetic compatibility in this areas, due to interference caused by power lines as well as the radiated interference. During operation, the device may be the source of interference.

✋Caution✋
We warn users, that they are responsible for possible interference from welding.

4. TECHNICAL DATA

		ALF 251	ALF 261
Mains voltage	V/Hz	3x400/50	3x400/50
Mains protection	A	16 @	16 @
Max. effective current I_{1eff}	A	10,4	8,9
Welding current range	A	25 - 250	25 - 260
Open-circuit voltage U_{20}	V	17,9 - 45,2	17,9 - 45,2
Welding current (DC=100%) I_2	A	170	170
Welding current (DC=60%) I_2	A	200	200
Welding current (DC=x%) I_2	A	x=30% 250	x=25% 260
Voltage steps		10	10

Protection		IP 23S	
Standards		EN 60974-1; EN 60974-10 cl. A	
Dimensions (w x l x h) compact	mm	500x868x806	
Dimensions (w x l x h) generator	mm	x	x
Weight compact	kg	76	76
Weight generator	kg	x	x
Wire speed	m/min	1 - 19	1 - 19
Wire speed (for KTC version)	m/min	1,5 - 16	1,5 - 16
Spool diameter	mm	300	300
Spool weight	kg	18	18

		ALF 280	**ALF 320**	**ALF 400**
Mains voltage	V/Hz	3x400/50	3x400/50	3x400/50
Mains protection	A	16 @	16 @	20 @
Max. effective current I_{1eff}	A	8,4	10,8	13,7
Welding current range	A	40 - 290	40 - 340	50 - 400
Open-circuit voltage U_{20}	V	18,3 - 40,1	18,2 - 44,9	19,4 - 49,8
Welding current (DC=100%) I_2	A	170	200	240
Welding current (DC=60%) I_2	A	210	230	290
Welding current (DC=x%) I_2	A	30%=290	25%=340	25% = 400
Voltage steps		10	12	2 x 10
Protection		IP 23S		
Standards		EN 60974-1; EN 60974-10 cl. A		
Dimensions (w x l x h) compact	mm	500x868x806		
Dimensions (w x l x h) generator	mm	500x868x889		
Weight compact	kg	88	99	109
Weight generator	kg	83	94	103
Wire speed	m/min	1 - 19	1 - 19	1 - 19
Wire speed (for KTC version)	m/min	1,5 - 19	/	/
Spool diameter	mm	300	300	300
Spool weight	kg	18	18	18

Wire Feed Unit PS4 GAS aXe		
Wire speed	m/min	1 - 19
Input voltage U_1	V/Hz	24/1~50

Input current I_1	A	4
Welding current I_2 (DZ=100%)	A	320
Welding current I_2 (DZ=60%)	A	400
Spool diameter	mm	300
Spool weight	kg	18
Protection		IP 21S
Dimensions (w x l x h)	mm	264x704x507
Unit weight (without wire and torch)	Kg	21
Standards		EN 60974-5

Machines ALF with KTC version aXe differ from the original version of the machine in parameter values of pregas time and postgas time:

- Pregas time 0,1 s
- Postgas time 0,5 s

5. ACCESSORIES

DELIVERED WITH THE MACHINE

1. Earthing cable 3m with a clamp
2. Feed roll 0,8 - 1,0mm
3. Gas hoses

ACCESSORIES TO ORDER

1. Wire cleaner
2. CO2 Gas pre heating cable
3. Reduction valve KU 5, K 2
4. Gay cylinder
5. Torch consumables
6. Earthing cable 4 - 5 m
7. Feed rolls 0,6-0,8 1,0-1,2 1,4-1,6 for carbon steels, aluminium, flux core wires
8. Torches with UP-DOWN remote control
9. Welding torches (see the table below)

Torch type	Cooling	Welder
MB 24KD	Gas	ALF 251-280 aXe
MB 36KD	Gas	ALF 320 aXe
MB 36KD	Gas	ALF 400 aXe

6. DESCRIPTION OF THE APPLIANCE

MAIN PARTS

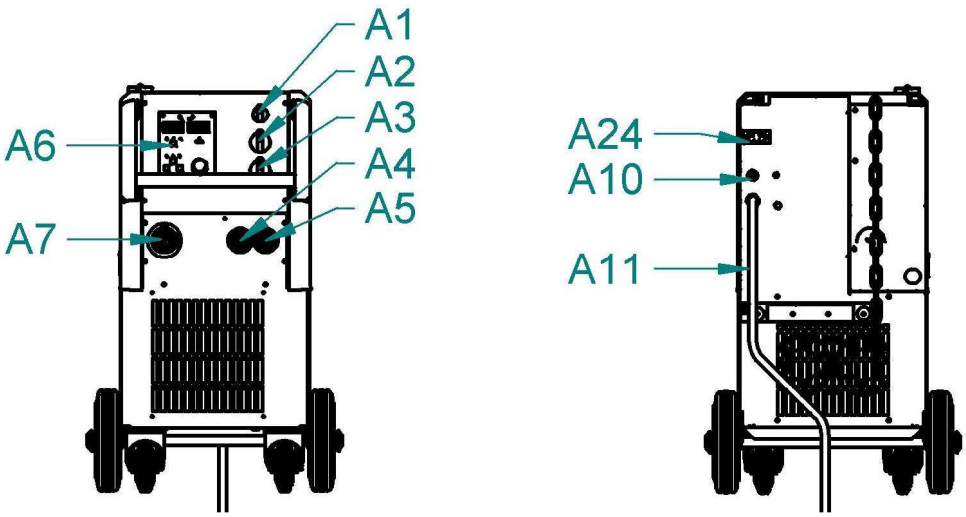

Fig. 1 - Main parts of ALF compact aXe

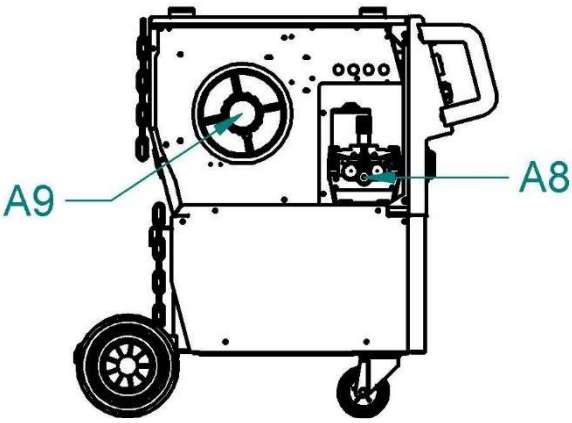

Fig. 2 - Main parts of ALF compact aXe

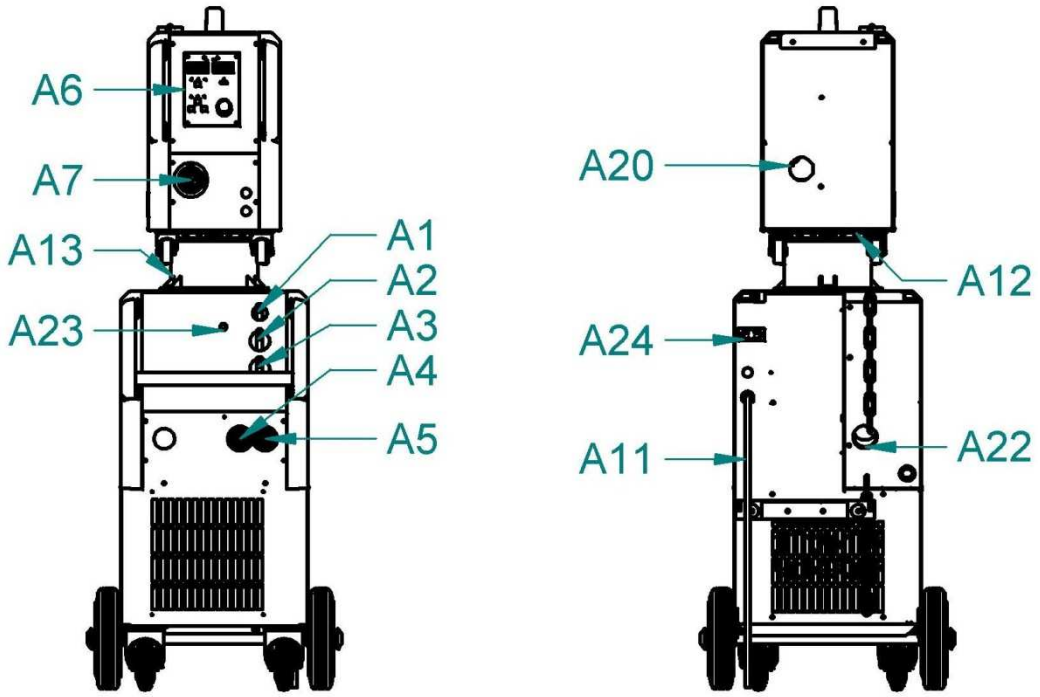

Fig. 3 – Main parts of ALF Separate aXe

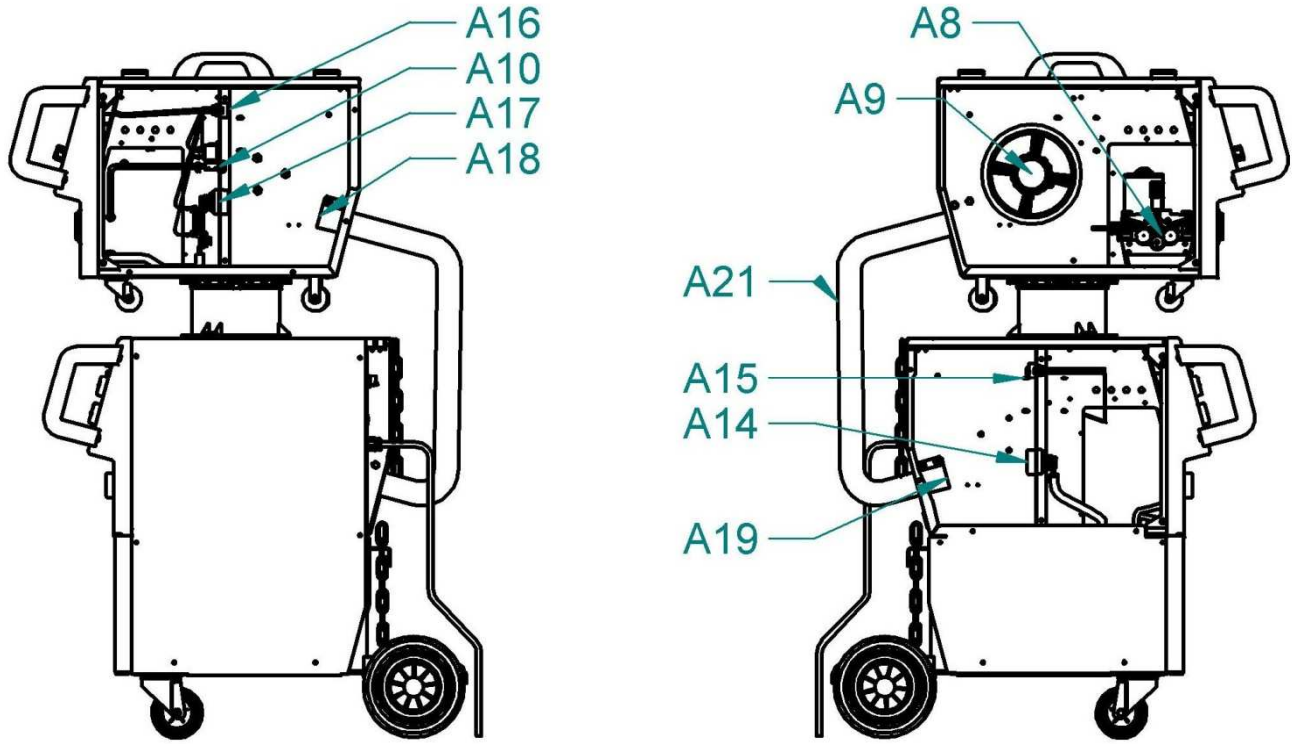

Fig. 4 - Main parts of ALF Separate aXe

A1	ON / OFF Switch
A2	Switch coarse
A3	Switch smooth

A4	Quick connector -
A5	Quick connector - -
A6	PCB control panel
A7	EURO connector
A8	Wire Feeder
A9	Spool Holder
A10	Solenoid Valve
A11	Mains Cable
A12	Feeder Holder Feeder
A13	Feeder Holder Generator
A14	Quick Connector
A15	Connector female
A16	Connector male
A17	Quick Connector male
A18	Clamp for the cable Bundle
A19	Clamp for the cable Bundle
A20	Cable Bundle Inlet Feeder
A21	Cable Bundle
A22	Cable Bundle Generator
A23	LED ON Indicator
A24	Gas heater connector

CONTROL PANEL - OVERVIEW

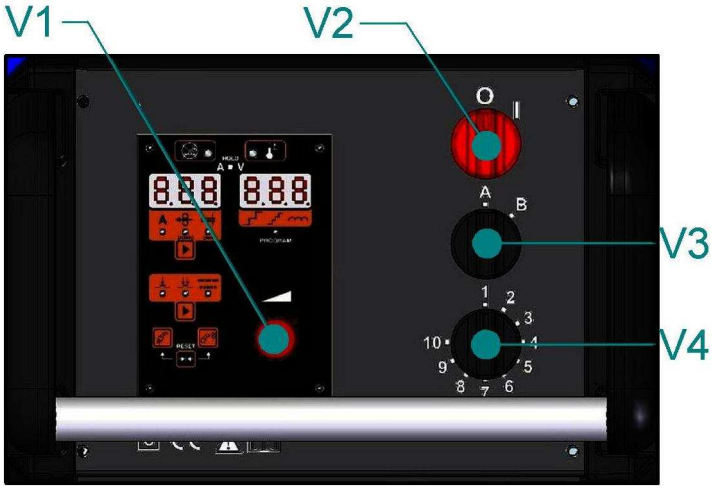

Fig. 5 - ALF 400 aXe control panel

V1	PCB - encoder
V2	ON / OFF Switch

V3	Switch coarse
V4	Switch smooth

DIGITAL CONTROL PANEL MINOR2-MAJOR-SYNERGY

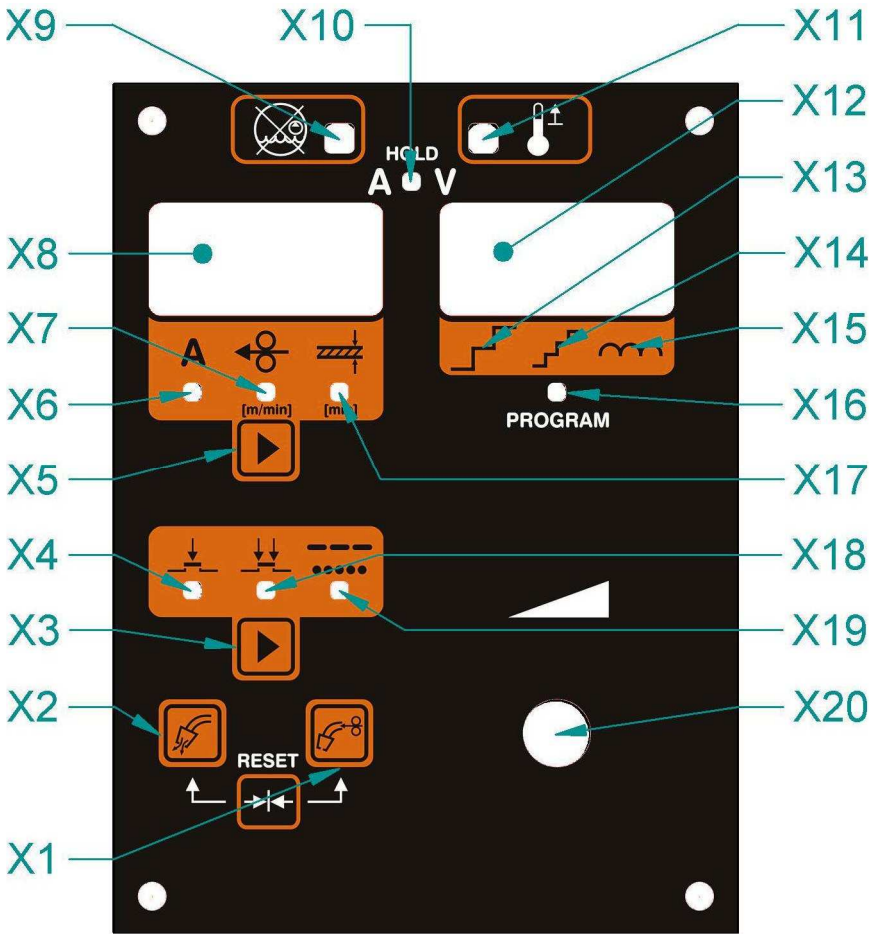

Fig. 6 – MINOR2-MAJOR-SYNERGY digital control panel

Pos.	Symbol	Description
X1		Button • Wire insertion • default RESET (together with button X2)
X2		Button • Gas test • default RESET (together with button X1)
X3		Button • Switches between 2S or 4S, • Press more than 3s will initiate spot or interval mode

		• Enters secondary parameters (together with button X5)
X4		Green LED 2 Stroke
X5		Button • In MANUAL disabled • In SYNERGY switches among A, wire speed or material thickness • Enters secondary parameters (together with button X3)
X6	A	Green LED – lights if on the display X8 are displayed Amperes (required setting), (just SYNERGY).
X7	[m/min]	Green LED - lights if on the display X8 is displayed Wire Speed in m/min (required setting), (just SYNERGY).
X8		Left Display X8, shows: • Amperage (real or required) • Wire speed • Material thickness • Program No • Secondary parameters: - ISP – initial speed (soft start) [%] - PrG – Pre gas time [s] - PoG – Post gas time [s] - brn – Burn back time [s] - SPo – Time of tack welding [s] - Int - Time of interval [s]
X9		LED - Cooling circuit error
X10	HOLD A V	LED - Lights after finishing welding and signals the HOLD function of A+V (last measured parameters)
X11		LED - Thermal overheating. Leave the machine on to cool down by means of the fans.
X12		Right Display • Voltage (real) • Values of the secondary parameters • Switches and choke settings (Just SYNERGY)
X13		Position of the coarse switch (just SYNERGY)
X14		Position of the smooth switch (just SYNERGY)
X15		Position of the choke (just SYNERGY)
X16	PROGRAM	LED – The mode of selecting the program is active (just SYNERGY).

X17		Green LED – lights if on the display X8 is displayed material thickness, (just SYNERGY).
X18		LED - 4 Stroke
X19		LED • When flashes, the interval welding mode has been selected • When illuminated, the spot welding mode has been selected
X20		Encoder • Sets wire speed (all models) , Amperage or material thickness (just SYNERGY) • Selects program No (just SYNERGY) • Sets secondary parameters

BASIC CONTROL PANEL

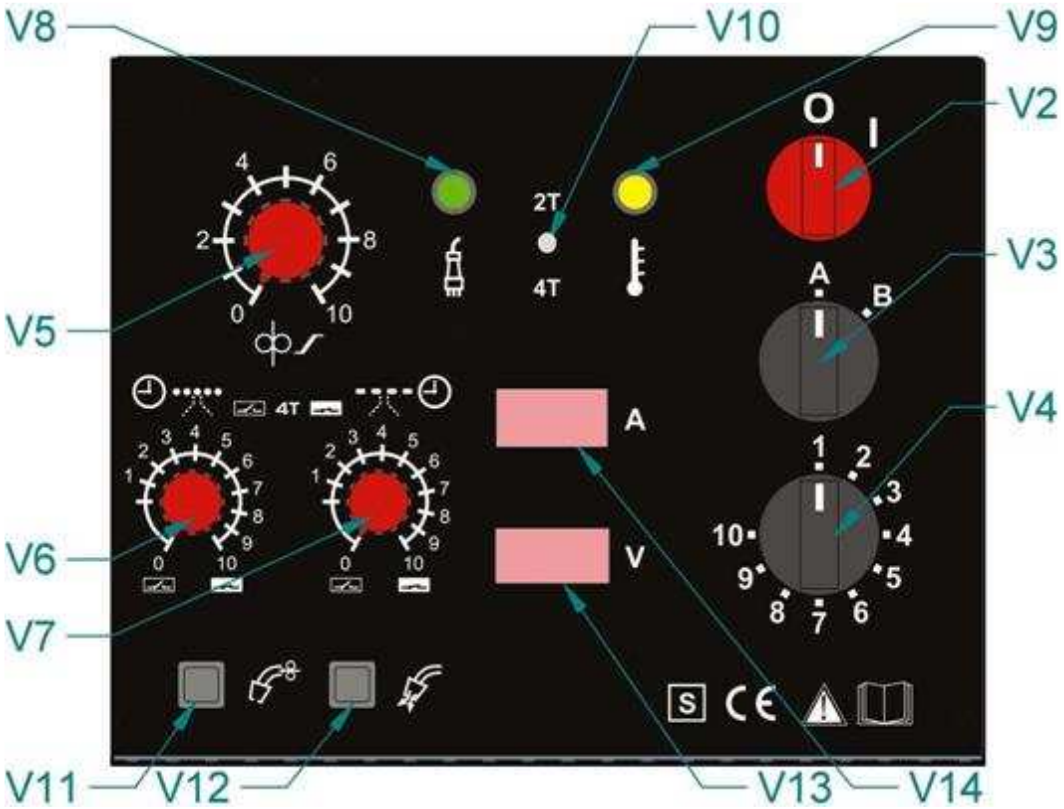

Fig. 7 – BASIC control panel

V2	On/Off Switch
V3	Switch Coarse
V4	Switch Fine
V5	Wire speed
V6	Spot time

V7	Interval time
V8	LED ON
V9	LED thermal protection
V10	Switch 2T/4T (optional)
V11	Wire insertion
V12	Gas test
V13	A meter (optional)
V14	V meter (optional)

WIRE FEEDER

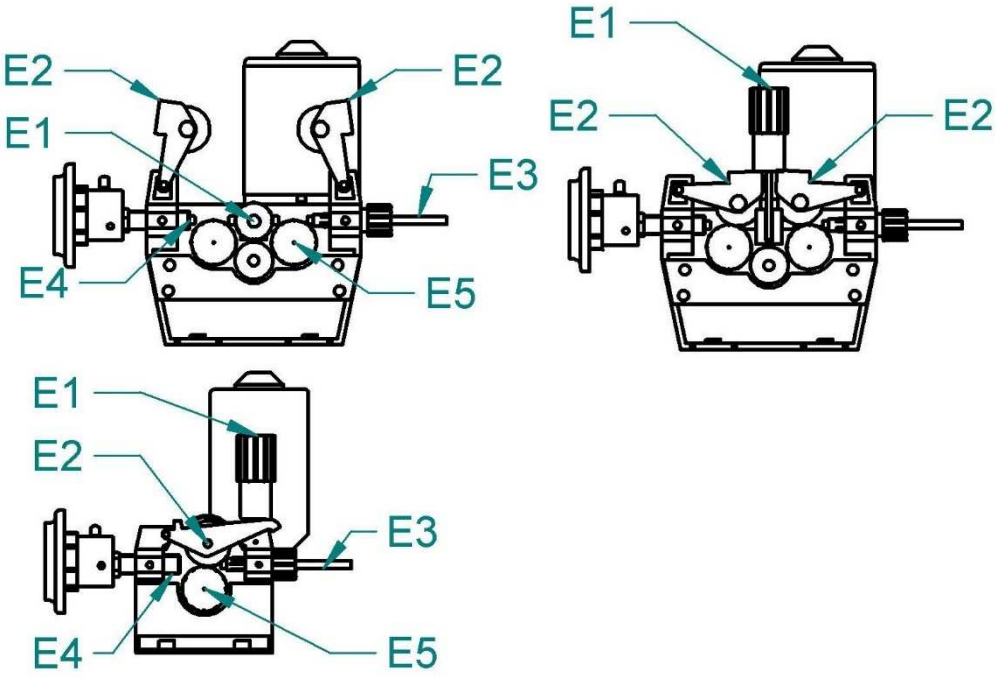

Fig 8 – Wire feeder 4 rolls, 2 rolls

Pos.	Description
E1	Fixing shaft
E2	Pressure arm
E3	Liner- Feeder
E4	EURO connector
E5	Roll, Plastic cup

		PS 2(W)	PS 4(W)
		2-rolls	4-rolls
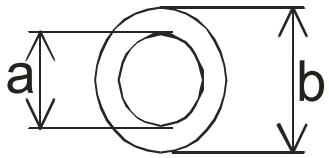		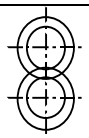	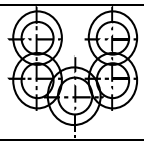
		a = 22 mm	a = 22 mm
		b = 30 mm	b = 30 mm
Grove type	**Wire diameter**	**Item No**	
Steel 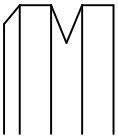	0,6-0,8	2187	
	0,8-1,0	2188	
	1,0-1,2	2189	
	1,4-1,6	2176	
	1,2-1,6	2511	
	2,0-2,4	2512	
Aluminium 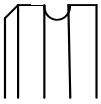	0,8-1,0	2270	
	1,0-1,2	2269	
	1,4-1,6	2315	
	1,2-1,6	2316	
	1,6-2,0	2513	
Flux core 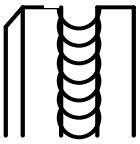	0,8-1,0	2318	
	1,0-1,2	2319	
	1,2-1,4	2320	
	1,2-1,6	2321	
	1,6-2,0	2514	
	2,0-2,4	2515	

7. GETTING STARTED

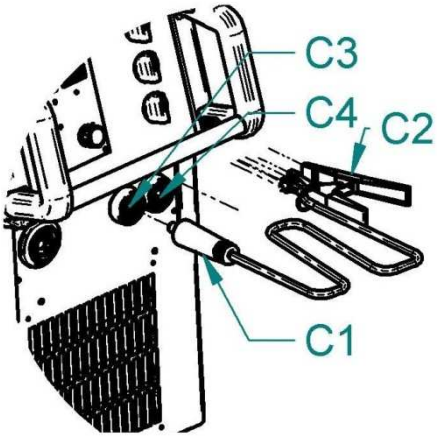

Fig 9 – Earthing cable connecting

C1	Quick Connector Male
C2	Earthing Clamp
C3	Quick Connector -

C4	Quick Connector - -

1. Connect the quick connector **C1** into **C3** or **C4** (according the welding current).
2. Connect the earthing clamp **C2** to the welding piece
3. In case your appliance is a model with separate wire feeder connect the feeder with the generator by means of cable bundle **A21**.
4. Plug the mains plug to 3x400 V mains.
5. Switch the machine on by the ON/OFF switch **A1**
6. There will appear type of the machine and software version on the displays for ca 3 s time – not on BASIC.
7. Then the machine will enter the manual program (P0) and on the left display will be the wire speed in m/min (or the last parameters of previous settings). On the right display will appear symbol --- (in manual P0 program) or the recommended settings (in programs P1 – P9) - not on BASIC

INSERTING THE WIRE

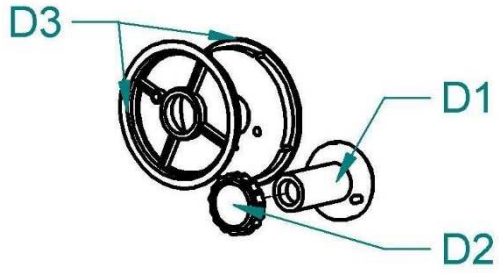

D1	Spool Holder
D2	Nut Spool Holder
D3	Adapter

Fig. 10 – Spool holder

1. Open the side cover of the wire feeder space
2. Put the wire spool on the wire spool holder **D1** using the adapter **D3** and fix it with the fixing nut **D2**
3. Cut off the curved or damaged end of welding wire and lead it through the inlet liner **E3,** and the roll into the liner inside the EURO torch connector (about 5 cm). Make sure, that you use the suitable groove.
4. Put the pressure arm **E2** down in that way, that the teeth or the gear fit and fix it by setting the lever **E1** into vertical position.
5. Adjust the pressure nut that way that it provides constant movement of wire but it does not deform wire.

INSERTING THE WELDING WIRE INTO THE WELDING TORCH

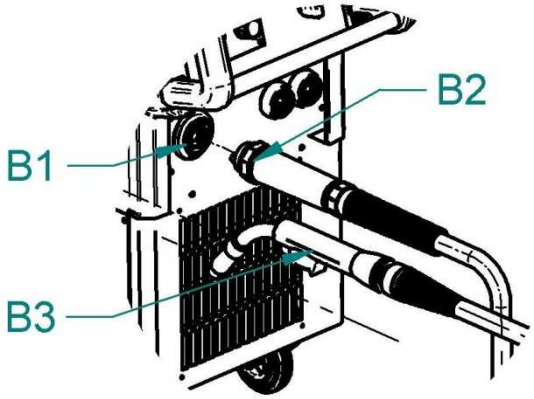

Fig. 11 – Welding torch connecting

B1	EURO connector
B2	EURO connector male
B3	Torch

1. Connect the torch **B3** to the EURO connector **B1** on the
2. It is recommended to use torches form 2 up to 5 m long.
3. Take off the torch gas cup
4. Take off the torch tip
5. Press the button inlet wire **X1** for digital**, V11** for BASIC
6. When the wire reaches the end of the torch, release the button **X1/V11**, screw on the tip and open nozzle.

CHANGING THE WIRE FEEDER ROLL

1. Every wire feeding roll in ALFA IN machines can be used for two different diameters of welding wire – the rolls have two grooves.
2. When the machine is equipped with two roll wire feeder move the lever **E1** to the right (2 roll feeder)/ forward (4 roll feeder). The pressure arm shall pop up.
3. Unscrew the plastic fixing cup **E5** and take off the roll
4. In case there is suitable groove on the roll, turn it around and fix it back to the feeder.

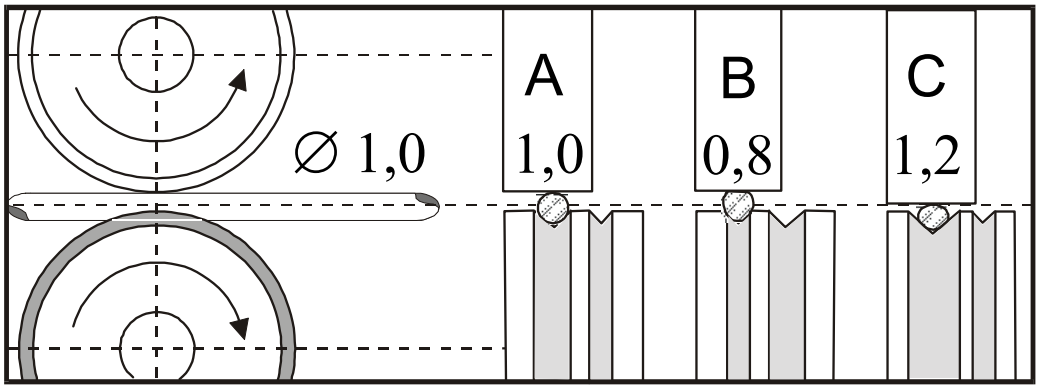

Fig. 12- The influence of the roll groove on the wire

A	Correct
B	Wrong
C	Wrong

ADJUSTING THE MACHINE FOR WELDING OF ALUMINIUM

For feeding the AL wire it is necessary to use roll with the “U” profile of the groove. To prevent problems with feeding use wires with diameter 1,0 or more mm of AlMg3 or AlMg5. The torch must be equipped with Teflon liner and special tip. As shielding atmosphere use Argon.

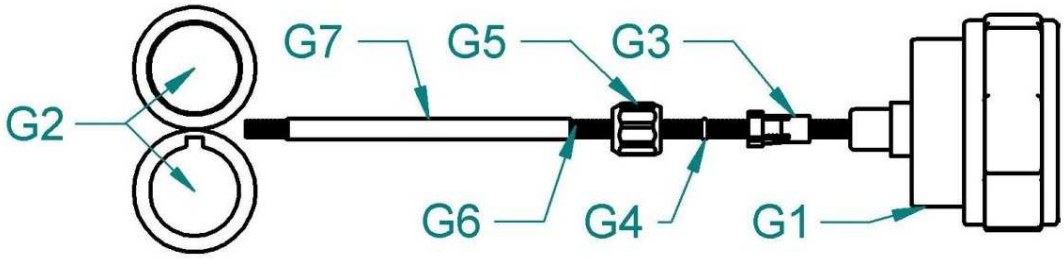

Fig 13 – Set for welding aluminium

G1	EURO connector
G2	Rolls
G3	Liner terminal for 4,0mm, 4,7mm outer diameter
G4	O – ring 3,5x1,5mm
G5	Nut
G6	Teflon Liner
G7	Sustain pipe for teflon and plastic liner

GAS FLOW SETTING

The electric arc and the weld must be perfectly shielded by gas. Too small amount of gas does not perform the protective atmosphere and on the other hand to big amount of the gas brings air into the electric arc.

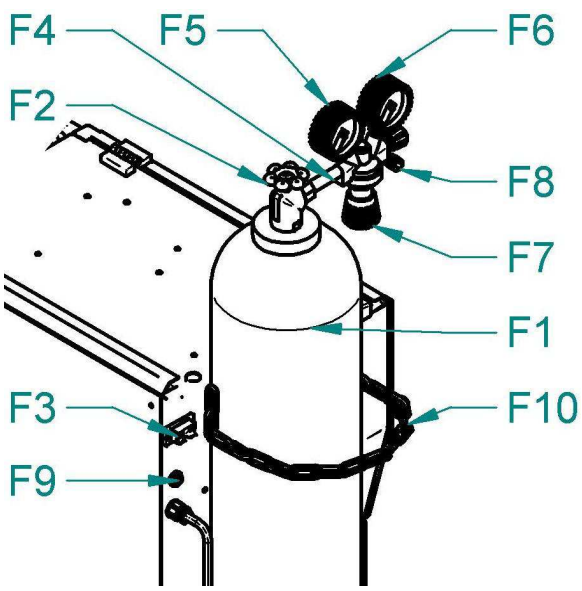

Fig. 14 – Gas fitting

F1	Gas Cylinder
F2	Cylinder Valve
F3	Gas heater connector
F4	Pressure Reducer
F5	High Pressure Manometer
F6	Low Pressure Manometer
F7	Adjusting Screw
F8	Gas outlet
F9	Solenoid Valve
F10	Chain

1. Place the gas cylinder on the platform and fix it properly by the fixing chain. We recommend using bolts and nuts to fix it more safely.
2. Connect the pressure reduction valve on the gas cylinder.
3. Connect the gas hose to gas outlet **F8** on the valve and the gas inlet **F9** on the machine
4. In case you use gas CO2 it may be needed to use suitable gas heater (only above 6 l/min). Connect the heater to the **F3** heater connector (optional). Use type corresponding to voltage and current given on the shield.
5. Open the **F2** cylinder valve
6. Press the button Gas test **X2** for digital, **V12** for BASIC
7. Adjust the amount of gas on the reduction gas valve (it is not a part of the welding machine) by the **F7** adjusting screw
8. Release the button **X2** for digital, **V12** for BASIC

8. WELDING

For orientating adjusting of the welding current and voltage you can use empirical relation U2 = 14+0,05 2. From that you can specify desired voltage.

SETTING WELDING CURRENT AND VOLTAGE

When the wire had been installed and gas had been set it is possible to start welding.

The appliance must be plugged into the mains, the ON/OFF switch **V2** on "I".

To select the voltage use step switches **V3, V4** - ALF 400, ALF 280 and 320 only **V3**

To select the current (that is linked to the wire speed) use the encoder **V1**.

WELDING MODES

Machines works in four modes:

1. Continuous two stroke (2T)
2. Continuous four stroke (4T)
3. Spot welding
4. Interval welding

TWO STROKE DIGITAL

Press the button **X3** (2T/4T) and select the LED **X4** . Welding procedure starts by pressing the button in the torch handle. It is necessary to keep the button pressed all the time during welding. The welding stops by releasing the torch button.

TWO STROKE BASIC

Potentiometers **V6** and **V7** must be in 0 position.

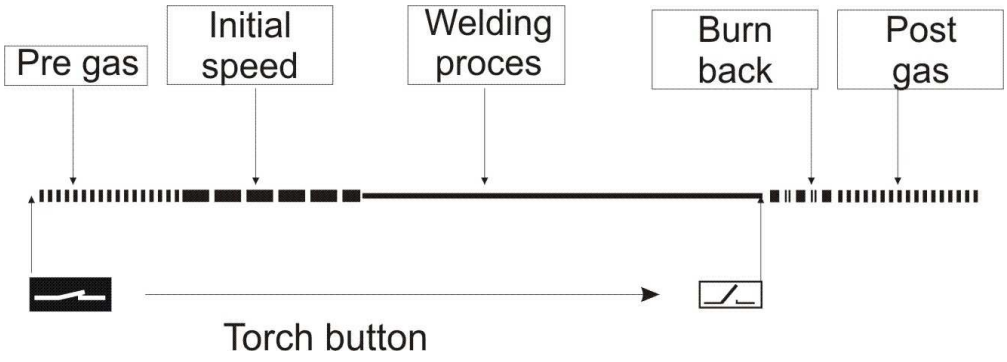

FOUR STROKE DIGITAL

Press the button **X3** (2T/4T) and select the LED **X18** . The four stroke mode is being used mostly for long welds, when there is no need to hold the torch button pressed. The welding procedure start by pressing the torch button; after releasing the torch button the welding continues. The welding stops after the second pressing and releasing the torch button then.

FOUR STROKE BASIC

Set the potentiometers **V7** into any position 1 – 10. Potentiometer V6 must be in 0 position.

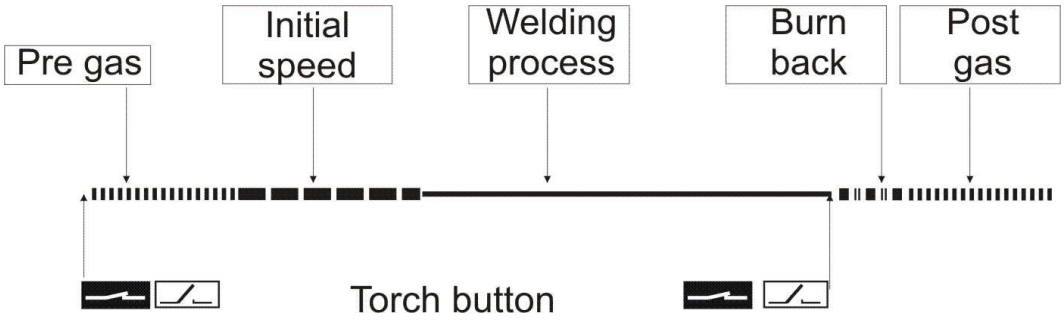

SPOT AND INTERVAL WELDING DIGITAL

Keep pressing the button **X3** (2T/4T) for at least 3s

If led LED 16 continuously lights the spot mode has been selected. If led 16 flashes the interval mode has been selected.

You can have spot or interval welding both in 2 stroke and in 4 stroke mode (by means of short pressing the button **X 3** - LEDs **X4** and **X18** indicate the mode. Those modes are available in 2T or 4T mode.

To get out of those modes, keep pressing the button 3 for more than 3 s.

SPOT AND INTERVAL WELDING BASIC

SPOT and INTERWAL welding in BASIC are just in 2T.

SPOT WELDING – The potentiometer **V7** must be in 0 position. By means of potentiometer **V6** select the time of a spot.

INTERVAL WELDING - By means of potentiometer **V6** select the time of a spot and by means of potentiometer **V7** select the time of an interval (the period during which the machines do not weld)

The spot welding mode is being used for welding short welds of the same length. The pressing the torch button activates the time circuit that starts and end the welding procedure.

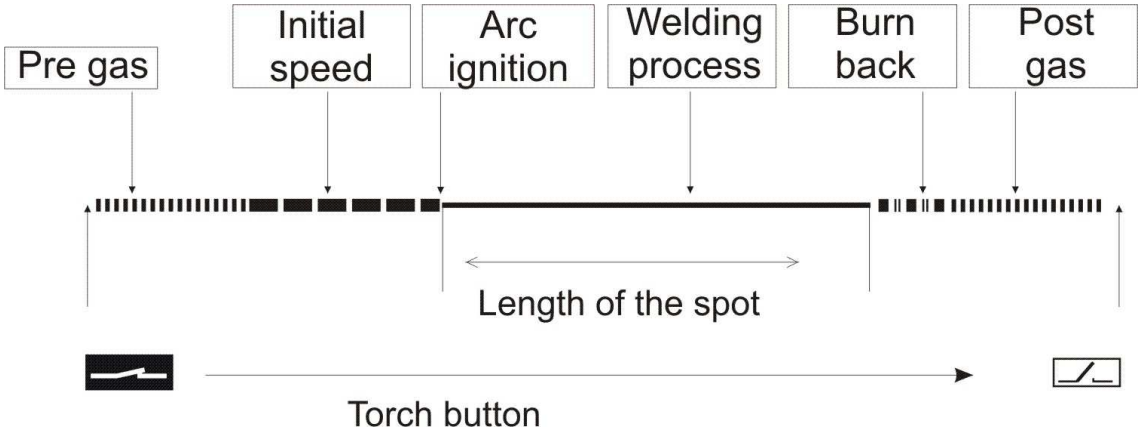

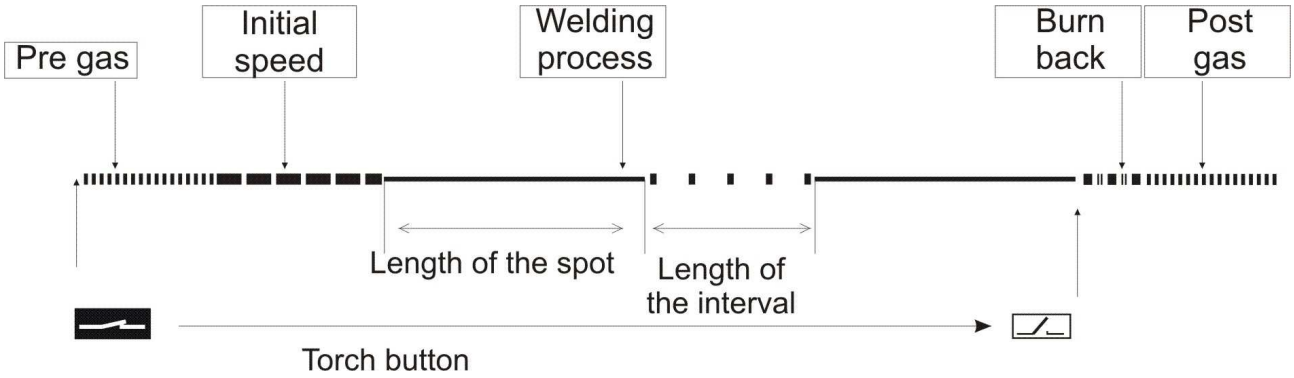

SECONDARY PARAMETERS

If necessary it is possible to change the secondary parameters:

Initial wire speed (soft start)	ISP
Pre gas time	PrG
Post gas time	PoG
Burn back time	brn
Time of spots (tack or interval welding)	SPo
Time of intervals (interval welding)	Int

Press buttons **X3** and **X5** at the same time for at least.

On left display will appear ISP. On the right display will appear value of the chosen parameter.

By means of the Encoder you can change the parameter.

Use the button **X3** to select the next parameter. When you press the button **X3**, the value of the previous parameter had been stored.

SYNERGY MODE (ONLY FOR THE SYNERGY MODELS)

Synergy machines can advise the welder the optimum settings. Please keep in mind that those machines are not equipped with incremental sensors and therefore the advised settings are always approximate (+/- 1÷3 steps on the fine voltage step).

It depends also on welding position, kind of welding wire, gas and mains voltage.

The optimal setting has been determined for welding position PA.

The welder select the parameter that he knows by means the button **X5** and the encoder **X20** (Current in A, wire speed in m/min or material thickness). Then the welder can the recommended settings see on the right display (see Fig. 17).

SELECTING PROGRAM

1. press button **X3** for 3 s
2. LED **X16** PROGRAM will illuminate. On left display **X8** No of the last program will appear.
3. Selects the desired program (see the table below) by means of Encoder **X20** and confirm by pressing button **X3**. (If within 10 s is not selected program and confirmed by button **X3** LED **X16** would turn off and program has not been selected).

	∅0,8mm	∅1,0mm	∅1,2mm
Ar 82% $CO_2$18% carbon steel	P1	P2	P3
CO_2 100% carbon steel	P4	P5	P6
Ar 97,5% CO_2 2,5% CrNi 308	P7	P8	P9
Manual	P0		

Fig. 15 – Table of programs ALF320, ALF400

	□ 0,8mm	□ 1,0mm	□ 1,2mm
Ar 82% $CO_2$18% carbon steel	P1	P2	P3
CO_2 100% carbon steel	P4	P5	P6
Manual	P0		

Fig. 16 – Table of programs ALF280

SYSTEM OF ADVICES ON DISPLAY X12 (JUST SYNERGY)

1. First left figure – coarse voltage A - B (JUST ALF 400).
2. Second left figure - fine voltage 1 - 9, the tenth position of the switch is signed as „0“; ALF 320 shows numbers 1-12.
3. Third left figure – choke position.

Fig. 17 – Synergy advice

9. ROUTINE MAINTENANCE & INSPECTION

1. The only routine maintenance required for the ALF range of machines is a thorough cleaning and inspection, with the frequency depending on the usage and the operating environment.

   ✋WARNING ✋

2. Disconnect the ALF from the mains supply voltage before disassembling.
3. Special maintenance is not necessary for the control unit parts in the Welder. If these parts are damaged for any reason, replacement is recommended.

✋CAUTION ✋

4. Do not blow air into the welder during cleaning. Blowing air into the welder can cause metal particles to interfere with sensitive electronic components and cause damage to the welder.
5. To clean the welder, disconnect it from the mains supply voltage then open the enclosure and use a vacuum cleaner to remove any accumulated dirt and dust. The welder should also be wiped clean. If necessary, solvents that are recommended for cleaning electrical apparatus may be used.
6. Troubleshooting and repairing of ALF welding equipment should only be carried out only by suitably qualified or competent person.
7. A ‘competent person’ must be a person who has acquired through training, qualification or experience, or a combination of them, the knowledge and skills enabling that person to safely carry out a risk assessment and repairs to the electrical equipment in question.
8. The person carrying out the servicing needs and repairs must know what to look at, what to look for and what to do.

10. STATEMENT OF WARRANTY

In accordance with the warranty periods stated below, ALFA IN guarantees the proposed product to be free from defects in material or workmanship when operated in accordance with the written instructions as defined in this operating manual.

ALFA IN welding products are manufactured for use by commercial and industrial users and trained personnel with experience in the use and maintenance of electrical welding and cutting equipment.

ALFA IN will repair or replace, at its discretion, any warranted parts or components that fail due to defects in material or workmanship within the warranty period. The warranty period begins on the date of sale to the end user.

If warranty is being sought, please contact your ALFA IN product supplier for the warranty repair procedure.

ALFA IN warranty will not apply to:

a. Equipment that has been modified by any other party other than ALFA IN’s own service personnel or with prior written consent obtained from ALFA IN Service Department.
b. Equipment that has been used beyond the specifications established in the operating manual.
c. Installation not in accordance with the installation/operating manual.
d. Any product that has been subjected to abuse, misuse, negligence or accident.
e. Failure to clean and maintain (including lack of lubrication, maintenance and protection), the machine as set forth in the

operating, installation or service manual.
Within this operating manual are details regarding the maintenance necessary to ensure trouble free operation.

NOTE

Warranty repairs must be performed by either an ALFA IN Service Centre, an ALFA IN distributor or an Authorised Service Agent approved by the company ALFA IN.
As a warranty list serves proof of purchase (invoice) on which is the serial number of the machine, eventually a warranty list on the last page of this manual.

11. DISPOSAL

Only for EU countries. Do not dispose of electric tools together with household waste material.

In accordance with European Council Directive 2002/96/EC on electrical and electronic equipment waste and its implementation in accordance with national law, electric tools that have reached the end of their service life must be collected separately and returned to an environmentally compatible recycling facility.

12. WARRANTY LIST

As a warranty list serves proof of purchase (invoice) on which is the serial number of the machine, eventually a warranty list below, which is filled in by an authorized dealer.

Serial number:	
Day, month (written in words) and year of sale:	
Stamp and dealer signature:	